Fermilab

ACCELERATOR DIVISION/CRYOGENIC SYSTEMS
ENGINEERING and DESIGN GROUP

A0 NORTH CAVE COOLDOWN AND PUMPDOWN PROCEDURE

Brian DeGraff

Rev: 3 (Aug 5th, 2005)
May 26, 2005
EXT. 6367

INTRODUCTION:

In support of SCRF research here at Fermilab, single cavities are routinely performance tested at the A0 North Cave Facility. The timescale for testing a cavity at A0 is four days once the Vertical Dewar is connected to the cryogenic infrastructure. These four days include cooling down to Nitrogen temperature, cooling down to Helium temperature, pumping down the vessel to 12 torr operating pressure, and finally warming back up to room temperature. This procedure will cover all details of the process except the final removal of liquid Helium prior to warming up to room temperature. This warming should be conducted under the supervision of Wade Muryani or his designee.

Prior to completing any portion of this procedure, all pertinent aspects of BDDP-CR-2700 (A0 North Cave Inspection Procedure) and BDDP-CR-2701 (A0 North Cave ODH Posting & De-Posting Procedure) must be completed.

PROCEDURE:

Once a test date has been scheduled by the physicists who are going to be conducting the test, two days prior is when this procedure should begin. See Appendix 1 for documentation pertaining to creating real time graphs to help track different variable changes throughout this procedure. See Appendix 2 for documentation pertaining to transitioning back and forth between 12 torr and 50 torr after the primary procedure has been completed.

Nitrogen Cooldown:

The cooling down of the Nitrogen Transfer Line and the Nitrogen Shield is the first step in getting the system cold.

1. Fill the C & D Nitrogen Dewars according to "A0 Photoinjector Cryogenics Operating Guidelines" [J. Fuerst, Rev. 12APR98]
2. Crack open the ball valve on the Nitrogen Line located right behind the North Cave Helium Stinger. The handle for the valve should be turned no more than 30° to allow for only a purge flow of Nitrogen to escape into the High Bay.
3. From the A0 North Cave Graphics page on ACCNET, click on the bottom yellow box with yellow text that reads ABORT FSM. This will reset the system to a "nominal" status.
   - ✓ *(Make sure that the red circle to the left of the box turns green for a few seconds. If not, enable setting from the ACCNET Utility Window and repeat this step)*

✓ *To access the ACCNET North Cave graphic, get a PA window from the ACCNET toolbar, type F6 in the upper left corner, select house <A0>, Unused SA and then A0SRFCRY. [The graphic should look like the one below]*

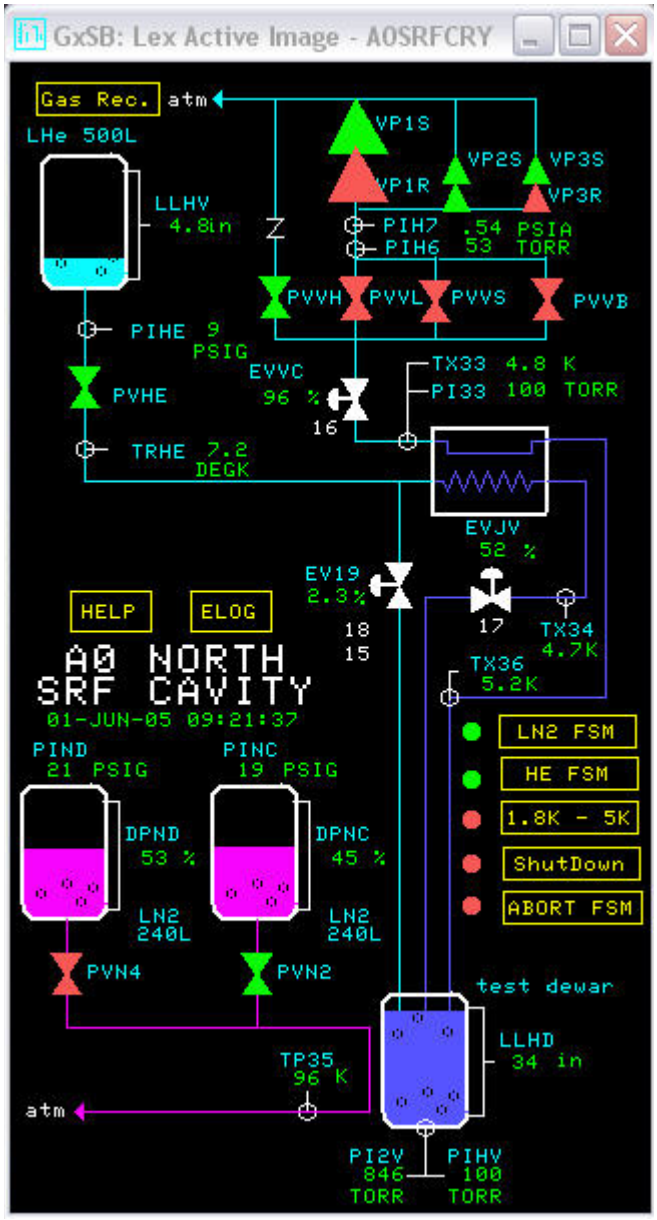

IMAGE 1: North Cave Graphic on ACCNET

4. Also from the A0 North Cave Graphics page on ACCNET, click on the top yellow box with yellow text that reads LN2 FSM. This will reset start the Nitrogen Flow. The red circle to the left of this box should turn green and stay green. One should also see one of the two Nitrogen valves (either T:A0PVN2 or T:A0PVN4) turn green indicating open.

Helium Cooldown:

After having Nitrogen flowing for ~24 hrs, check to see that T:A0TP35 is less than 140K. Once this is true, the 30K cooldown wave can be started. This portion of the procedure should be completed around 1500 on the day before the test is scheduled. All of the heater tapes around the vent piping for the North Cave should be plugged in. A "Caution Hot" should also be clearly displayed.

1. Sting a 500L Helium Dewar into the North Cave Stinger according to "A0 Photoinjector Cryogenics Operating Guidelines" [J. Fuerst, Rev. 12APR98]
2. Make sure the valve T:A0PVVH is open. If the valve is closed (shown in red on the North Cave graphic), open it and the valve should turn green.
   - ✓ *To access the ACCNET North Cave parameter page and change a device status, get a PA window from the ACCNET toolbar and type F9 in the upper left corner. Again in the upper left corner, type P3 is the -<XX>+ slot. In the fifth row down, there are a list of components, click on the word "valves" located at the far right. Now click on the digital status in the right column for the device you want to manipulate… an ON OFF and DSTAT should appear. Click ON to open the device and OFF to close the device.*
3. Loop 15 (on ACCNET F8 Page) should be inactive.
4. Loop 17 should be active/enabled with a minimum valve position and a maximum valve position (Min/Max) of 40/40. This setup will keep the valve open at 40% regardless of the change in loop input. This is done to cooldown the heat exchanger, but not relying on this valve to fill the cryostat.
5. Loop 18 has the responsibility of regulating the 30K cooldown wave overnight. The goal of this wave is to achieve a thermal equilibrium below the Q-disease region, while minimizing Helium usage during the cooldown. Loop 18 should be active/enabled with a Min/Max of 35/65. The loop setpoint should be ~30K. Setting the loop setpoint is difficult because the common units of temperature can not be set. To change the setpoint one has to change the F8 Loop from common to primary and then set the voltage. Changing the setpoint to 4.5 V will produce a common unit setpoint of 29.9K.
6. From the A0 North Cave Graphics page on ACCNET, click on the yellow box with yellow text that reads HE FSM. The red circle to the left of this box should turn green and stay green.
7. Open T:A0PVHE. This will start the Helium flow and cool down the system. [Starting a FTP here with T:A0EV19 and T:A0TX36 (per Appendix 1) might be helpful]

Helium Fill and Pumpdown:

On the day of the test, one should arrive and start the fill process about 1 ½ hrs before the agreed start time with the physicists. The pumpdown can not be started until permission is received from the physicists. Data taken during the pumpdown is very important to understanding the true performance of the cavity. Helium usage during the cooldown varies depending on the individual dewar. Experience has shown that if ~20 inches of Helium remain in the supply dewar (as read by T:A0LLHV), another dewar will not be necessary for the day's tests. If less Helium is available, have a second dewar

available and change when necessary. The South Cave needs to be at atmospheric pressure. If T:A0PIH4 is less than 6 psia, then activate the 1.8K TO 5K FSM. [Starting a FTP here with T:A0LLHV, T:A0LLHD, T:A0PISG and T:A0PI2V (per Appendix 1) might be helpful]

1. For filling the dewar with Helium, loop 18 needs to be inactivated.
2. Loop 15 should be activated with a Min/Max of 0/80 and a set point of 32 inches of Helium.
3. Loop 17 should still be active. Change the Min/Max to 40/70 with a set point of 34 inches of Helium.
4. Loop 16 should be active/enabled with a Min/Max of 0/100 and a setpoint of 12 torr.
5. Once the dewar has greater than 32 inches of Helium (as read by T:A0LLHD), change the Loop 15 Min/Max to 0/0. The cooldown valve is no longer needed. The T:A0EVJV valve will maintain liquid level from now on.
6. Turn off T:A0VP1R and T:A0VP3R. This will turn the first stage (used when inlet pressure is lower) of the vacuum pumps off.
7. Once the dewar has around 34 inches of Helium, the pumpdown can begin. The most important component of the pumpdown is the manual valve (labeled Valve 32 on the flow schematic) that is in series with the pneumatic valve T:A0PVVS. Set this manual valve to **¼ TURN OPEN**. If the valve is open more than this, the pumpdown will place too much strain on the vacuum pumps.
8. Change loop 17 max position to 60%.
9. Open T:A0PVVB, Open T:A0PVVS and Close T:A0PVVH. [on F9 page]
10. At this point, watch the ACCNET device T:A0PISG. [This device can be seen on the A0 Gas Recovery Graphic shown below] During the initial stages of the pumpdown, it will read ~3.5 psig. This is fine. As the pumpdown progresses, this value will slowly fall. When it reaches 2.5 psig, give Valve 32 an additional ¼ Turn only. During the first half hour of the pumpdown, these ¼ turn will be enough to elevate A0PISG back to 3.5 psig. When the pressure in the vessel (as read by T:A0PI2V) reaches around 300 torr, more than one ¼ turn will be necessary. It is important to go back to the control room after every adjustment and check the new reading of A0PISG.

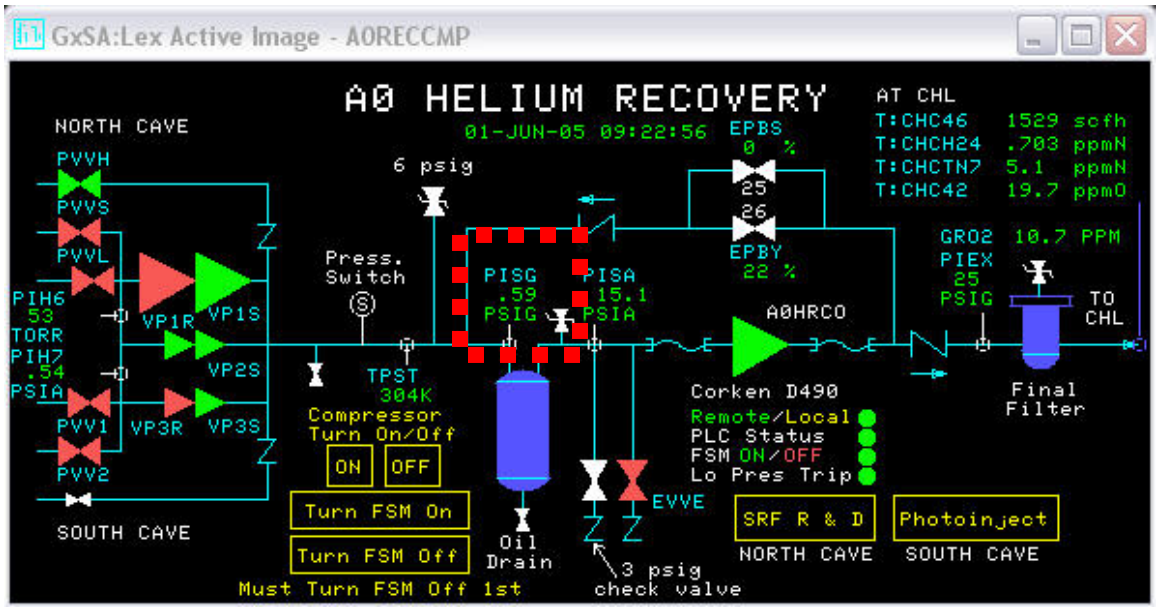

IMAGE 2: A0 Gas Recovery System Graphic on ACCNET

11. In order for the system to be pumped down to 100 torr (as read by T:A0PI2V), Valve 32 will eventually need to be actuated fully open. If the pumpdown stalls before reaching 100 torr with Valve 32 fully open, adjust the max position of loop 17 by -3% increments. After each adjustment wait ~10 minutes to see the progress of the pumpdown. Repeat lowering the maximum position of Loop 17 as necessary to maintain the pumpdown.
12. Once T:A0PIHV reads below 90 torr, turn on T:A0VP1R and T:A0VP3R. [Starting a FTP here with T:A0LLHV, T:A0LLHD, T:A0PISG and T:A0PIHV (per Appendix 1) might be helpful]
13. Once T:A0PIHV reads below 45 torr, open T:A0PVVL
14. The system will then take ~30 minutes to pump down to 12 torr. Once at 12 torr, loop 16 will take over and regulate to maintain the pressure. Again adjust the max position of loop 17 if the pumpdown stalls.
15. If the physicists desire to go below 12 torr (below 1.8K), there are two adjustments that need to be made. First change the loop 16 set point from 12 to 1 torr. Second close the valve T:A0PVHE. [To go back up to 12 torr from 1 torr simply reverse these changes.]

Turning Cryogenic System Off & Warming Up:

After testing has been completed, the North Cave needs to be transitioned from 12 torr back to atmospheric pressure.

1. From the A0 North Cave Graphics page on ACCNET, click on the yellow box with yellow text that reads 1.8K – 5K. This will raise the cryostat pressure. The red circle to the left of this box should turn green for a while.
2. Under the directions of an A0 Experts, a purge should be setup to dump the remaining liquid from the vessel and transition the cavity through the Q-disease region and back to room temperature. During the process be careful to keep T:A0PISG below 4 psig. This will keep the recovery compressor running and collect the valuable Helium Gas.

APPENDIX 1: CREATING FAST TIME PLOT (FTP)

During several stages of the cooldown and pumpdown, a real time ACCNET plot showing the trending of different variables can be very helpful. Creation of these plots is not mandatory for the completion of this procedure, but can be helpful in show subtle systems responses to variable changes.

There are several ways to create FTP graphs inside of ACCNET, but the easiest is to use the Utilities Window which is available from the ACCNET toolbar. The cyan colored text FTP appear in the upper left of the Utilities window as shown below:

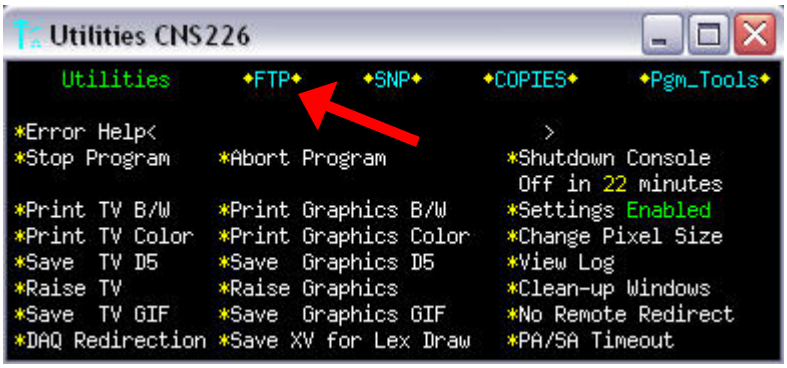

IMAGE 3: Utilities Window

Clicking on this text expands the window to allow for all the data of the FTP to be typed in. The expanded Utilities window is shown on the graphic below:

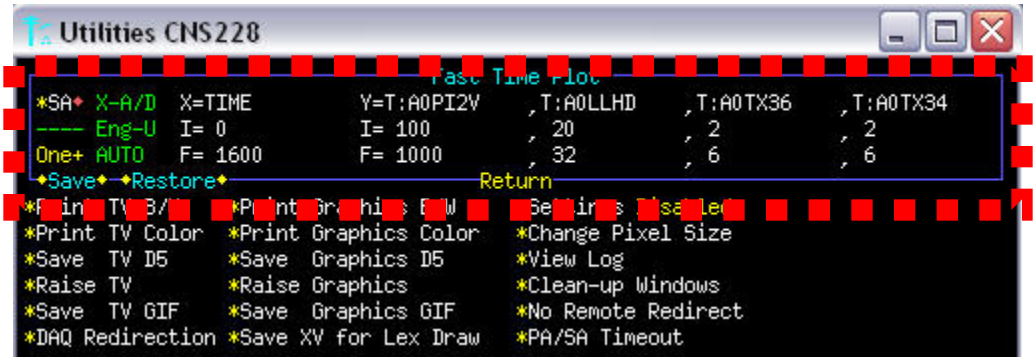

IMAGE 4: FTP Expansion Inside Utilities Window

There are several new items that appear and need to be set properly to generate a useable window. The left hand column inside the FTP window should appear as in Image 4. The "SA" displayed is which of the three (SA, SB, or SC) ACCNET window the plot will appear in. Clicking on the red diamond to the right of the SA text will cycle through the three available options. Be careful not to overwrite one of the other graphics (like the North Cave flow graphic) that is being used for this procedure. The text "One+" that appear at the bottom of the first column specifies how the FTP will operate. It is recommended that this One+ be used so that when the FTP time has elapsed, the plot will shift to the right and keep displaying data. Other options can be used if necessary.

The second column are various other options for FTP. For the purposes of this procedure, if any of these options are different from what is displayed in Image 4, click on the item and it will cycle until the appropriate value is found. The third colum, with the text “X=TIME” at the top, is the first of the customizable variables that can be set by the user. This is where the user tells ACCNET the x-axis length or width of the plot window. A short plot window will accurately show the user quick changes in the 1 hertz ACCNET signal. A long plot window will show trending over time at the expense of seeing what is immediately happening. The “I=0” should be left alone; this simply tells ACCNET that the user wishes to start at time = zero (duh!). The “F = some value” is what the user should set. This entry should be the number of seconds the user wishes to have the plot length. As shown in Image 4, the value of 1600 would make the plot length just under 27 minutes. Anywhere from 15 minutes (900 seconds) to 1 hour (3600 seconds) would be appropriate for the various stages of this procedure.

The real content of the FTP is entered in the fourth, fifth, sixth and seventh columns of the FTP window. This is where the user enters the four ACCNET variable that are desired to be tracked. In Image 4, these variables are T:A0PI2V, T:A0LLHD, T:A0TX36 and T:A0TX34. Different variable should be entered for the different stages of this procedure. The numbers located below the ACCNET names are the y-axis range that each variable will display at. Again discernment should be used when entering these values so that the user can see appropriate or even inappropriate changes in the system. For example, if a FTP was setup to see how the system was regulating the pressure at 12 torr, a scale of 0 to 100 would be bad since changes in pressure from 12 to 14 have a significant effect on cavity measurements. A more appropriate scale would be from 10 to 16.

Once all the variables are set with appropriate lower and upper y-axis limits, starting the FTP is obtained by simply clicking on any of the white text in the FTP window. Once this is done, the FTP should automatically appear and the data should start being displayed at a 1 hertz rate.

The save and restore buttons on the bottom left of the FTP window are very handy for quickly generating Fast Time Plots with all the appropriate settings. Once a FTP has been generated, clicking on the save button will allow the user to select from a list of categories. It is recommended that for A0 application, use either the category Experiments or Miscellaneous. One way to quickly generate a usable FTP is to click on the “Restore” button. This will generate the same list as mentioned above, from which one needs to select a category and then find their FTP save file. An example of one I have created is #30 in the list “Experiments” [A0 N CAVE PUMPDOWN].

APPENDIX 2: TRANSITIONING BETWEEN 12 TORR AND 50 TORR

In the course of physics testing, it may sometimes be necessary to get Q versus T data within a range of temperatures for various operating modes of a cavity. The North Cave Cryogenic System requires some additional manipulation to achieve this task. A0 loop 16 which controls T:A0EVVC (highlighted on image below) is the main instrument which needs to be manipulated to transition the pressure.

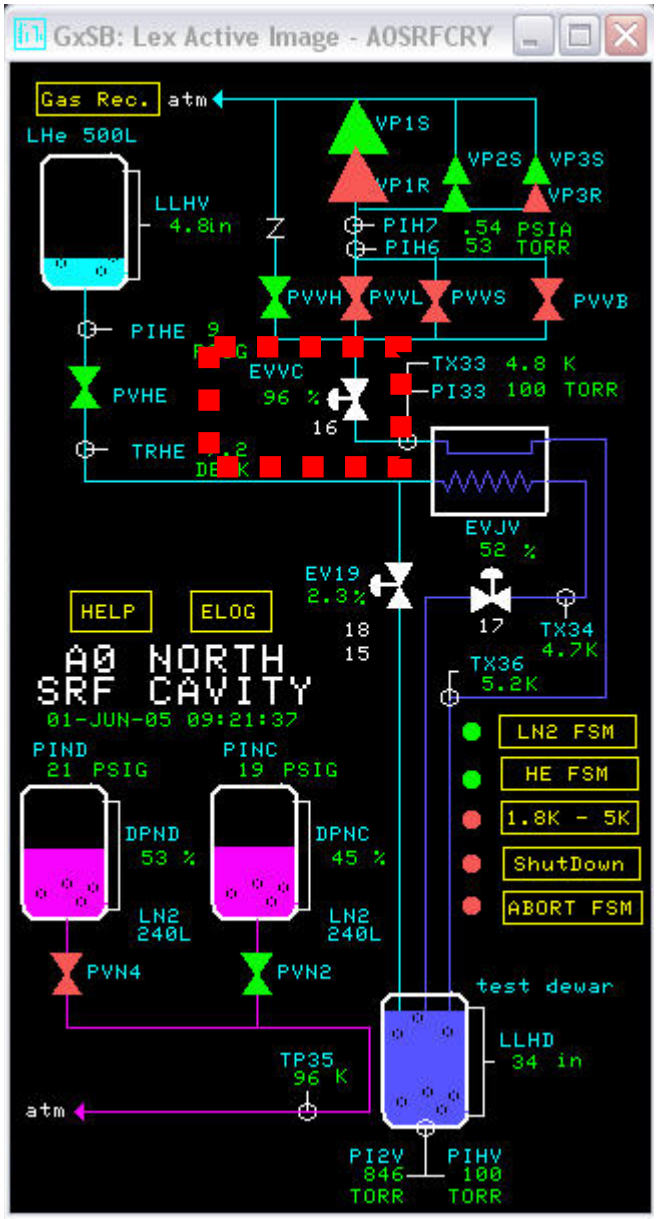

EVVC is the valve that normally regulates on loop 16 to a set point of 12 which maintains 12 torr for the Helium bath. Normally this loop regulates with a minimum position of 0% and a maximum position of 100%. To transition back and forth both the set point and the min/max position for the loop will need to be manipulated iaccording to the following procedure:

[Starting from 12 torr and raising the pressure to 50 torr]

1. The normal boil off of Helium vapor is not sufficient to transition the vessel in a decent amount of time. To assist the transition, it is extremely helpful to be filling the vessel through T:A0EVJV which is controlled by loop 17. Because of this need for filling, it is desirable to start this transition procedure when the liquid in the vessel (as read by T:A0LLHD) is around 27 in to avoid overfilling the vessel. Overfilling occurs above 34.5 in. To start filling, T:A0PVHE needs to be open and loop 17 should be enable/active with a min/max of 0/50 and a set point of 34 in.
2. Once the temperature inside the cave (as read by T:A0TX34) is below 10 K, manipulation of EVVC can begin. Start by changing the set point of the loop from 12 to 50.
3. Because of the parameters imbedded in loop 16, the valve may not entirely close even though the minimum valve position is 0 and the set point is well above the actual value. It may be necessary to lower the loop max also to 0 so that the pressure will rise at the fastest rate possible. NOTE: If the max is lowered to 0, be sure to set it back to 100 BEFORE the value reaches 50 torr or the system could "run-away" and the pressure would rise very quickly. I would recommend setting the max back to 100 around 40 torr.
4. If with the loop 16 max at 0, the rate of rise of the cavity pressure is still too slow, one could raise the maximum loop position of loop 17 by 5% increments until a desired slope is reached. NOTE: Again be careful on not exceeding the maximum vessel Helium level which is 34.5 in on LLHD. The farther open T:A0EVJV is, the faster the vessel will fill.
5. Once the pressure reaches 50 torr, loop 16 should start regulating the pressure to hold 50 torr.
6. If the fluctuations in pressure are too much for the physicists to handle, look at a FTP (see Appendix 1 for instructions) of the valve position of T:A0EVVC and try to approximate the average position of the valve. Chances are this value is around 20%. Try "fiddling" with minimum and maximum position for loop in order to dampen the oscillations in pressure. For an average of 20%, I might recommend first trying a loop 16 min/max of 5/35. For an average of 35% I might recommend first trying a loop 16 min/max of 20/50. If the average position of EVVC is really low, around 10%, but the pressure is still oscillating, try a loop 16 min/max of 5/15. This is the trickiest part of getting the system to hold stable at 50 torr.
7. When it is desired to go back to 12 torr operations, simply put loop 16 back to normal operating parameters with a set point of 12 and a min/max of 0/100. Close T:A0PVHE and change loop 17 back to min/max 0/0 and the system should return to normal operations.

GOOD LUCK!