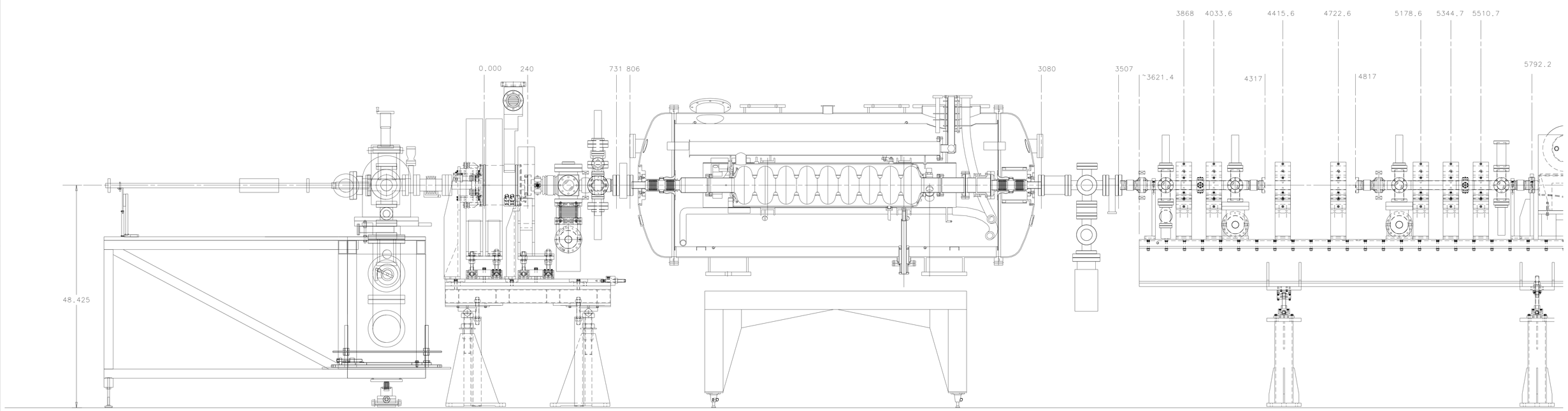
0.000
240
731
806
3080
3507
3621.4
3868
4033.6
4317
4415.6
4722.6
4817
5178.6
5344.7
5510.7
5792.2
48.425

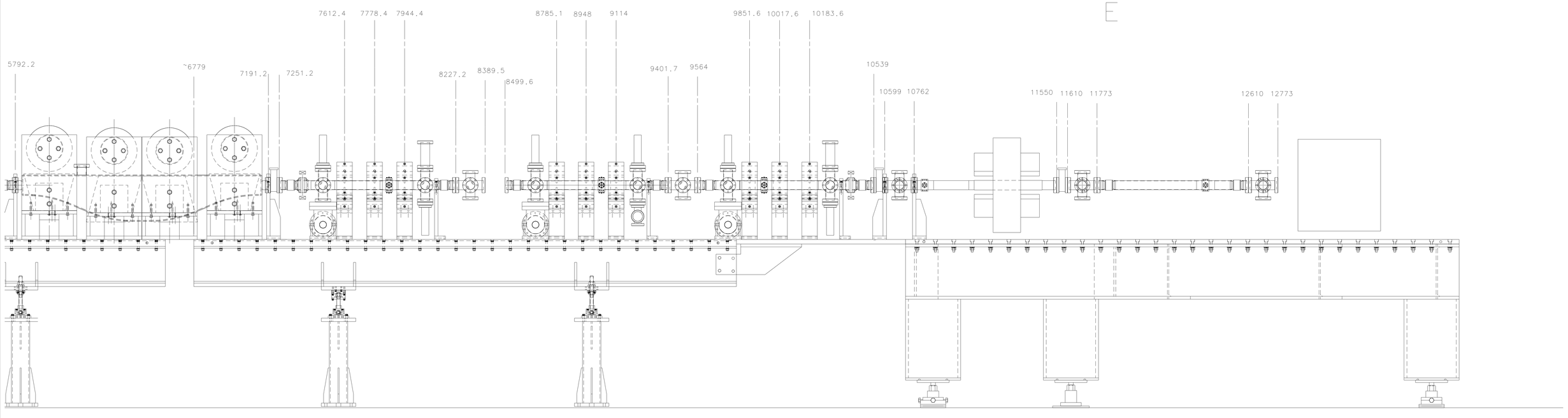
5792.2
6779
7191.2
7251.2
7612.4
7778.4
7944.4
8227.2
8389.5
8499.6
8785.1
8948
9114
9401.7
9564
9851.6
10017.6
10183.6
10539
10599
10762
11550
11610
11773
12610
12773